Signature Faucets

[ END THE ORDINARY. ]

# ARCUS TOUCH SENSE

## Single Handle Pull-Down Sprayer Kitchen Faucet

INSTALLATION MANUAL

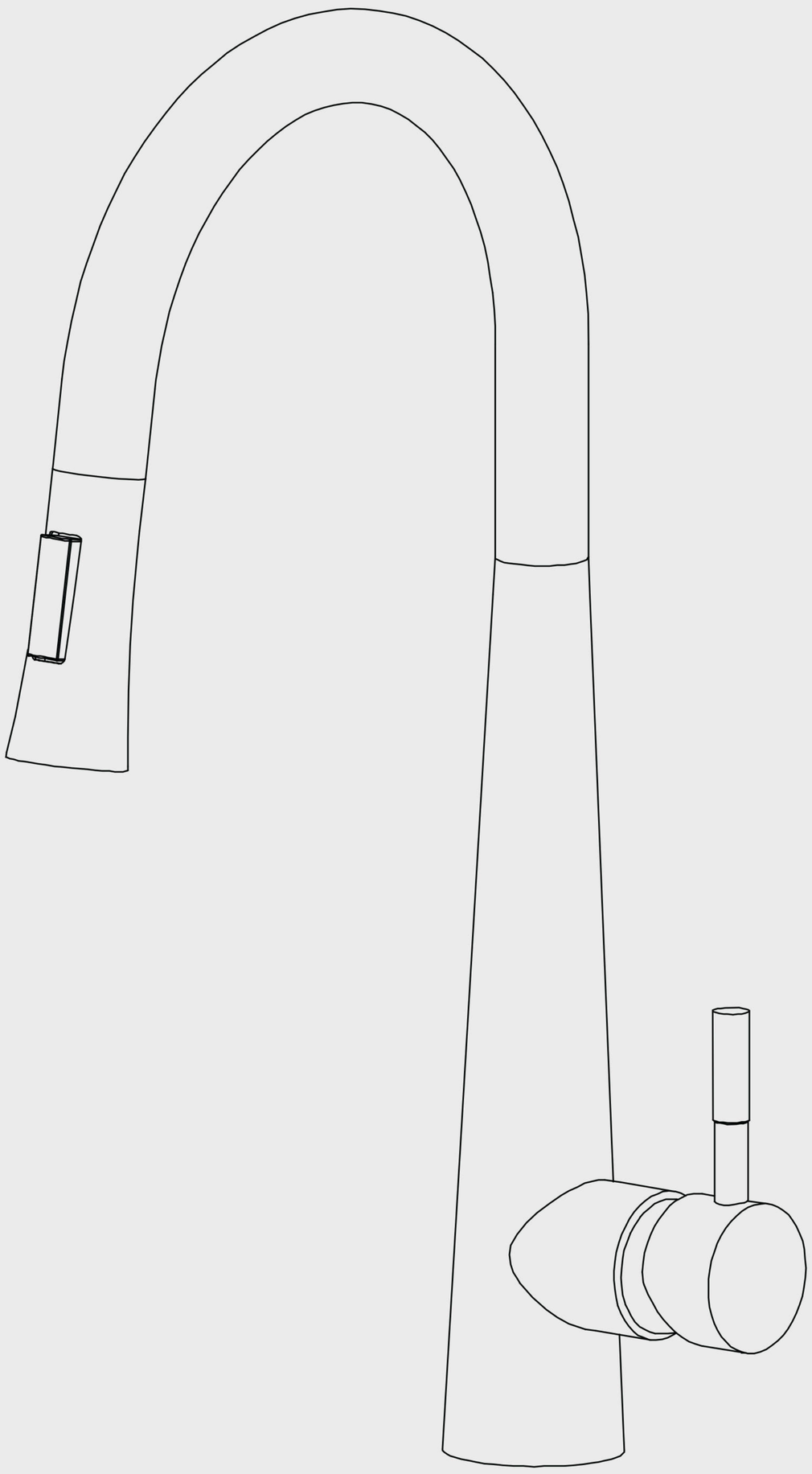



© 2026 Signature Faucets. All rights reserved.

Signature Faucets

INSTALLATION MANUAL

# ARCUS TOUCH SENSE

SF-KF-21851

## Single Handle Pull-Down Sprayer Kitchen Faucet

- Stainless Steel Construction
- Lead-Free Compliant
- Touch Sense Technology
- Pull-Down Sprayer
- Dual Function Sprayhead: Aerated Flow / Powerful Spray
- Ceramic Disk Cartridge
- High-Arc 360° Swivel Spout
- Dual Lock - Magnetic Spout & Gravity Ball
- Powered by 4x AA Batteries (not included)

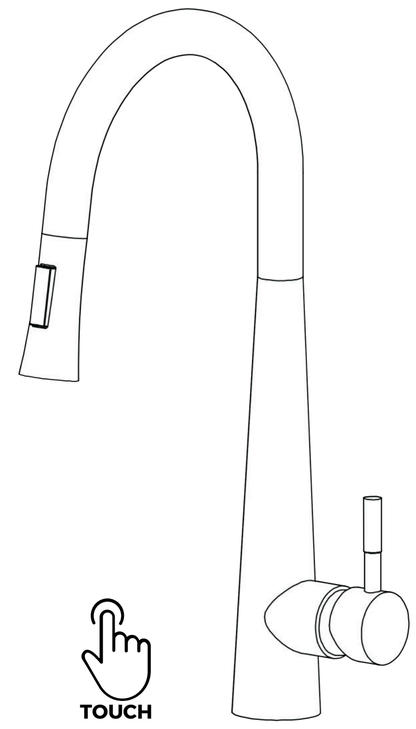


## CERTIFICATIONS & COMPLIANCE

- cUPC® Certified – Listed by IAPMO (meets Uniform Plumbing Code and CSA B125.1 requirements)
- ASME A112.18.1M – Compliant with plumbing fixture performance standard (U.S. & Canada)
- NSF/ANSI 61 (Q ≤ 1) – Certified for safe drinking water (low lead leaching)
- NSF/ANSI 372 / California AB1953 – Lead-free compliant (≤0.25% lead content by weight)
- CE Mark – European Conformity (product meets applicable EU safety standards)

Water usage is limited to these maximum flow rates as indicated by the corresponding product markings
- North America: 1.8 GPM max (6.8L/min) @ 60psi
- California (Title 20): Max 1.8 GPM @ 60 PSI

## THANK ❤ YOU FOR CHOOSING SIGNATURE FAUCETS

We appreciate the trust and confidence you have placed in us. Our products are manufactured to the highest standards of quality and workmanship. However, if you are not satisfied with this product, please do not hesitate to contact us at info@signaturefaucets.com or scan the QR code in the quick links below to reach out to us. We are committed to addressing any concerns you may have and appreciate your feedback.

**⚠ IMPORTANT - INSTALL PER MANUAL**
Please retain all essential components required for installation and refrain from discarding them.

**⚠ RETURN NOTICE**
If you wish to return a product, please ensure that it is securely packed in its original box, along with all of its packaging materials and tags. To start the return process, you can either scan the QR code in the quick links below or visit our website at SignatureFaucets.com.

**⚠ NOTE**
It is recommended to hire a professional plumber for all faucet installations and repairs.

## QUICK LINKS

INSTALLATION | CONTACT US | HELP CENTER | RETURN | SHOP

**NOTE:** This installation manual is subject to change without further notice.



© 2026 Signature Faucets. All rights reserved.

## SIZING & MEASUREMENTS

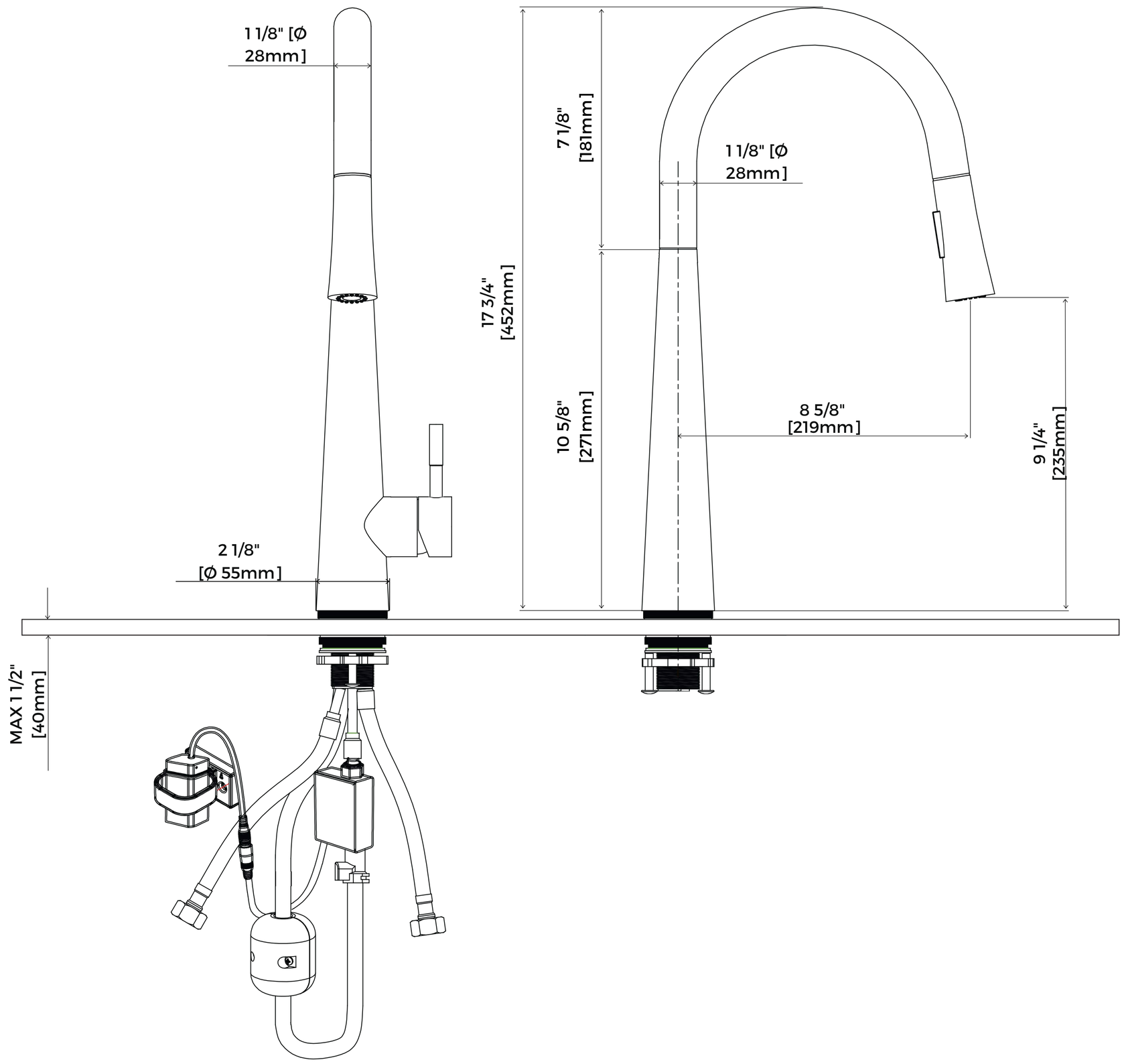


**NOTE:** Dimensions subject to change without notice.

## PRIOR TO INSTALLATION

- Make sure you have all the necessary parts by checking the diagram and parts list.
- Turn off the hot and cold water supply at the angle stops and turn on the old faucet to release any built-up pressure. Remove the existing faucet. Clean the sink or countertop to remove debris, plumber's putty, or silicone.
- Flush angle stops to release any debris before installation.
- Pre-drilled hole size requirement: min 1-3/8" (35mm).
- Max countertop thickness: max 1-1/2" (40mm).
- Ensure water pressure is between 20-125 PSI (includes a combination of hot and cold feed lines).

### ⚠ IMPORTANT

To ensure a smooth installation process, kindly read all instructions prior to installation! Failure to do so could result in personal injury, property damage, or product failure. Please note that Signature Faucets will not be held responsible for any labor charges, damages incurred during installation, repair, or replacement, or any indirect, incidental, or consequential damages, losses, injury, or costs of any nature related to this faucet.

## TOOLS REQUIRED

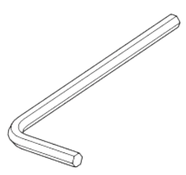

**Hexagon Wrench**

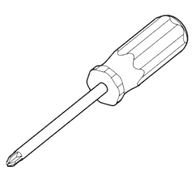

**Philips Screwdriver**

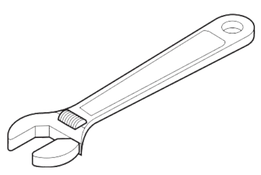

**Adjustable Wrench**

**Safety Goggles**



© 2026 Signature Faucets. All rights reserved.

# DIAGRAM & PARTS LIST

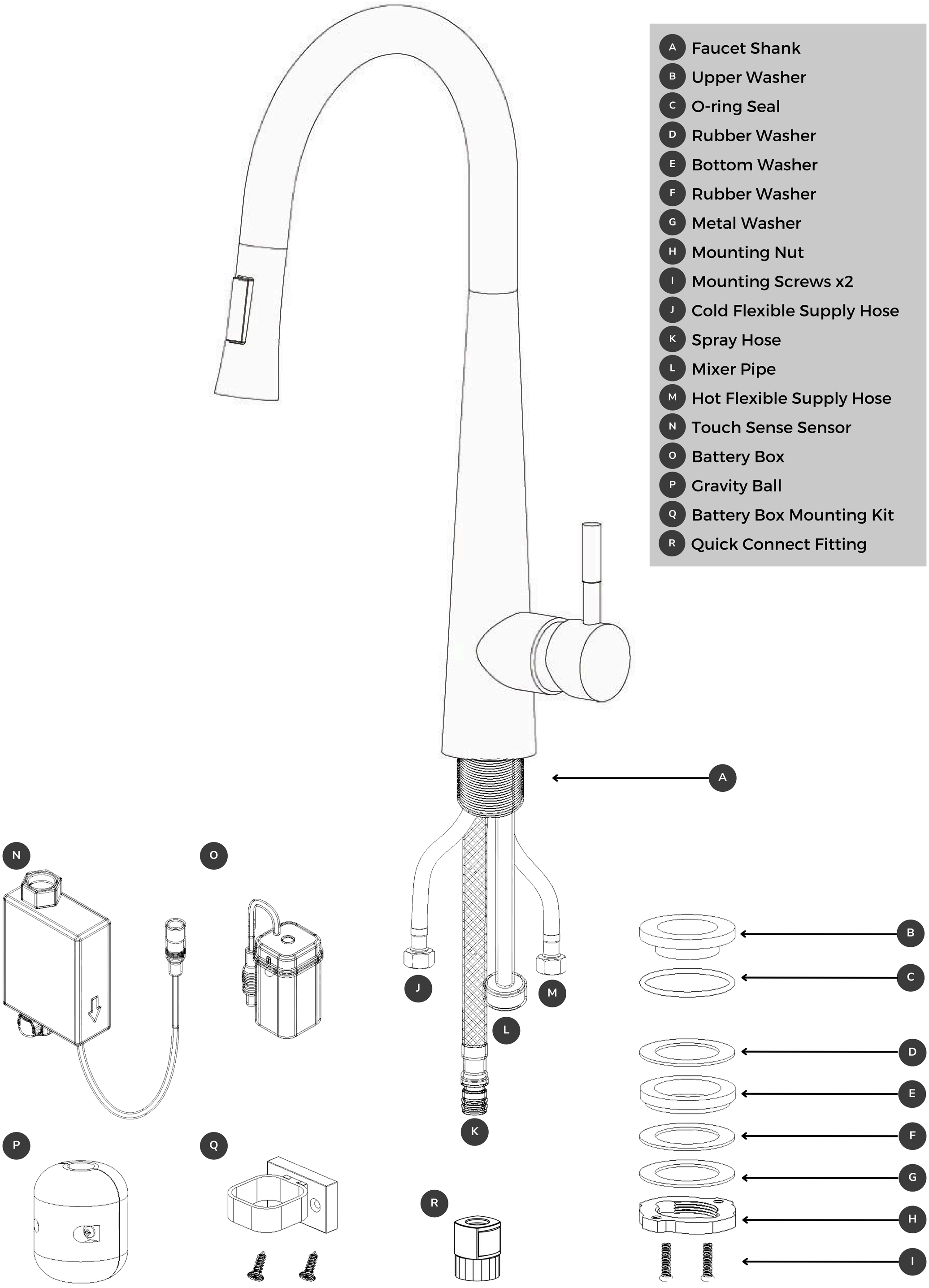


- A Faucet Shank
- B Upper Washer
- C O-ring Seal
- D Rubber Washer
- E Bottom Washer
- F Rubber Washer
- G Metal Washer
- H Mounting Nut
- I Mounting Screws x2
- J Cold Flexible Supply Hose
- K Spray Hose
- L Mixer Pipe
- M Hot Flexible Supply Hose
- N Touch Sense Sensor
- O Battery Box
- P Gravity Ball
- Q Battery Box Mounting Kit
- R Quick Connect Fitting



© 2026 Signature Faucets. All rights reserved.

## 1 Remove Mounting Hardware

Remove any mounting hardware B - I from the faucet shank A if installed.

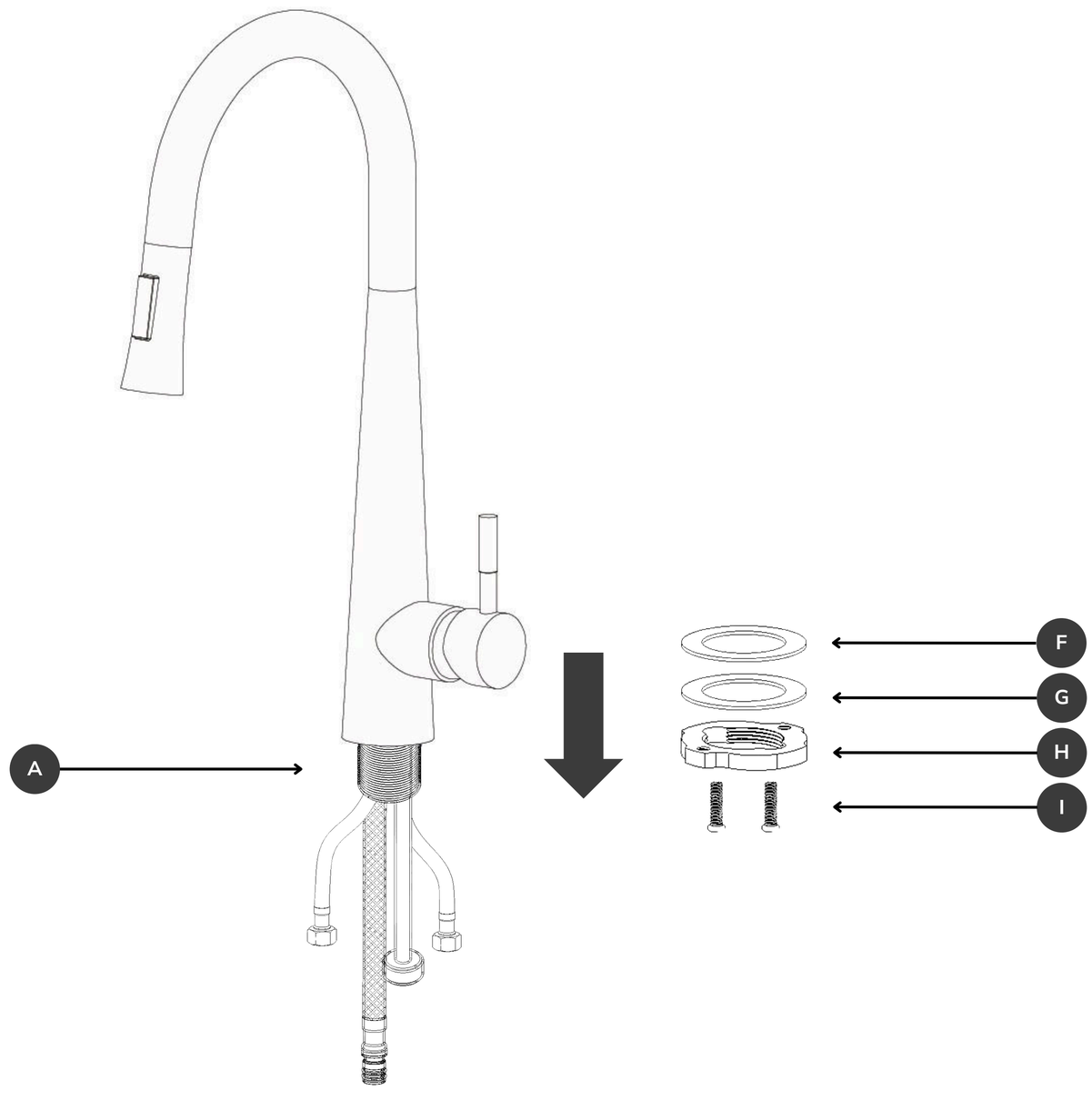


## 2 Mount Faucet to Deck

Install the upper washer B and O-ring seal C on the faucet shank. Thread faucet tubes and shank through the surface mounting hole. Position, and secure the faucet using mounting hardware D - H. Tighten mounting nut H and screws I for secure installation.

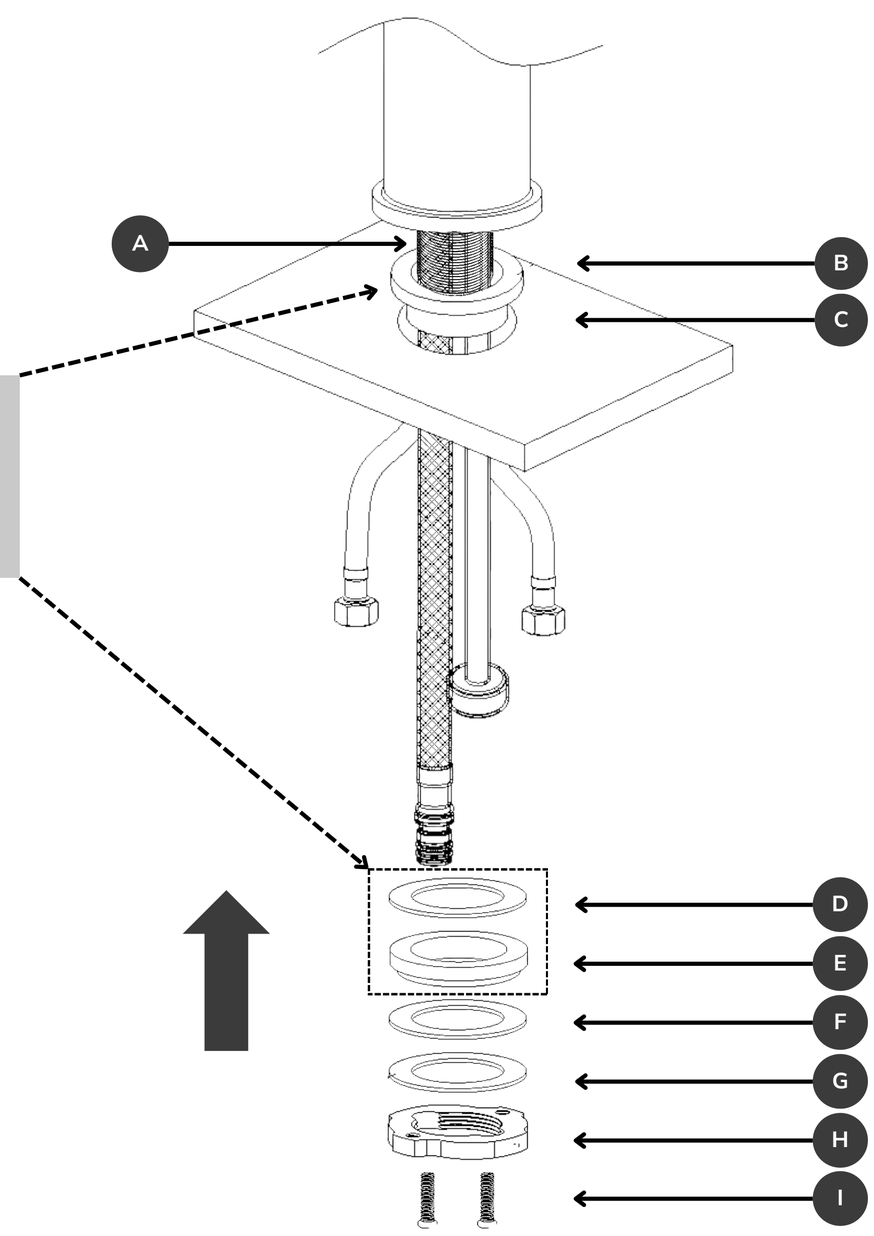


**⚠ ATTENTION**

Do not discard, necessary for the installation of the Touch Sense sensor.



© 2026 Signature Faucets. All rights reserved.

## 3 Install Touch Sense Sensor

Connect the sensor (N) to the mixer pipe (L), and tighten the hexagonal nut firmly. Then, attach the spray hose (K) to the quick connector of the sensor (N).

**⚠ CAUTION**

To avoid any damage, please ensure that you only rotate the hexagonal nut of the sensor and not the sensor itself.

**⚠ NOTE**

- It is highly recommended to close the faucet handle if not in use for an extended period of time.
- The touch switch will remain active even when the handle is closed.
- When the battery of the sensor is low or depleted, the touch switch remains open. Use the handle to control the faucet until you replace the battery.

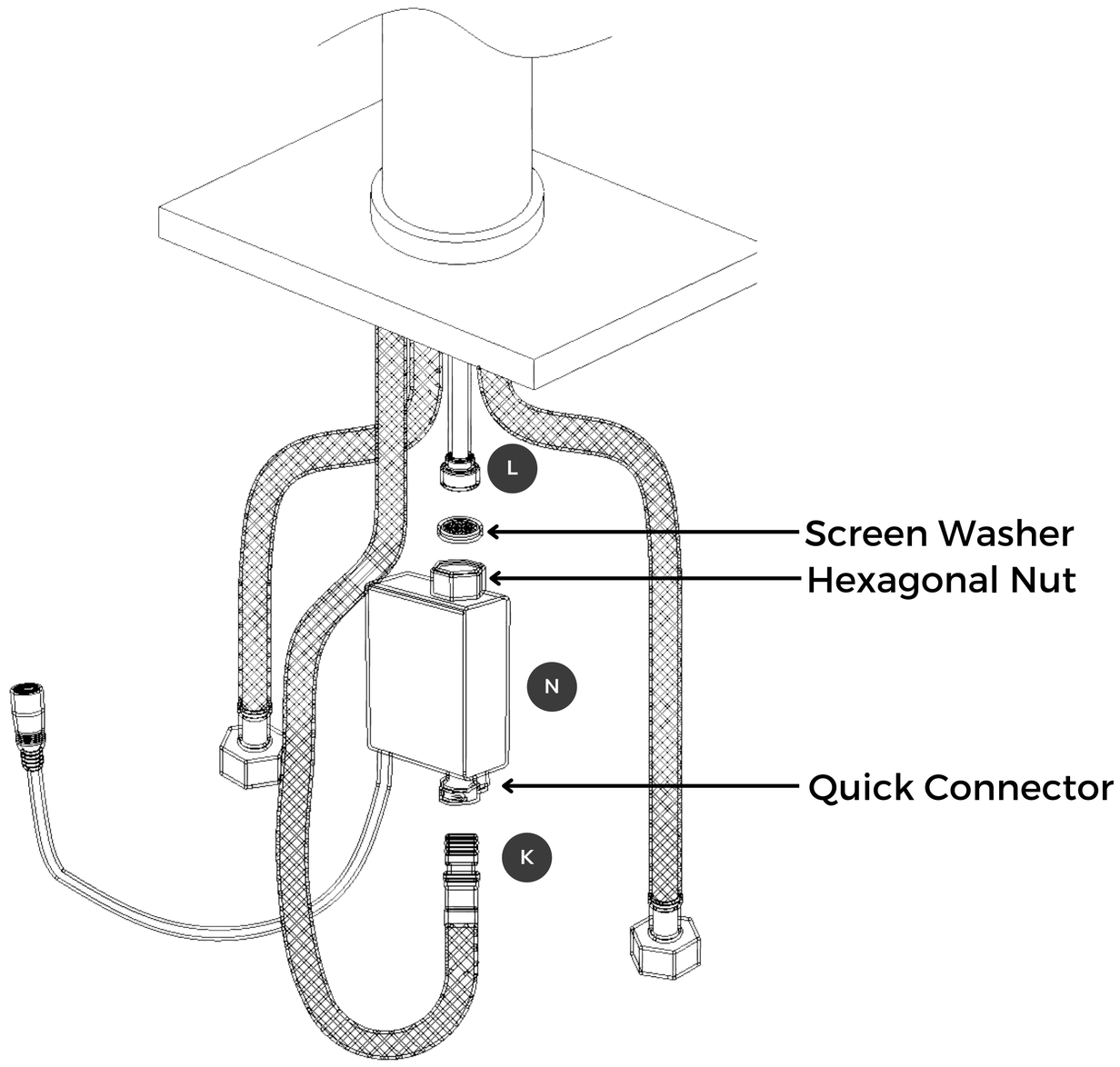


## 4 Install Battery Box & Gravity Ball

Mount the battery box (O) using the mounting hardware (Q) to the cabinet wall and connect it to the sensor (N). On the spray side of the hose, measure 15"(38cm) down from the body of the faucet and install the gravity ball (P) at this point.

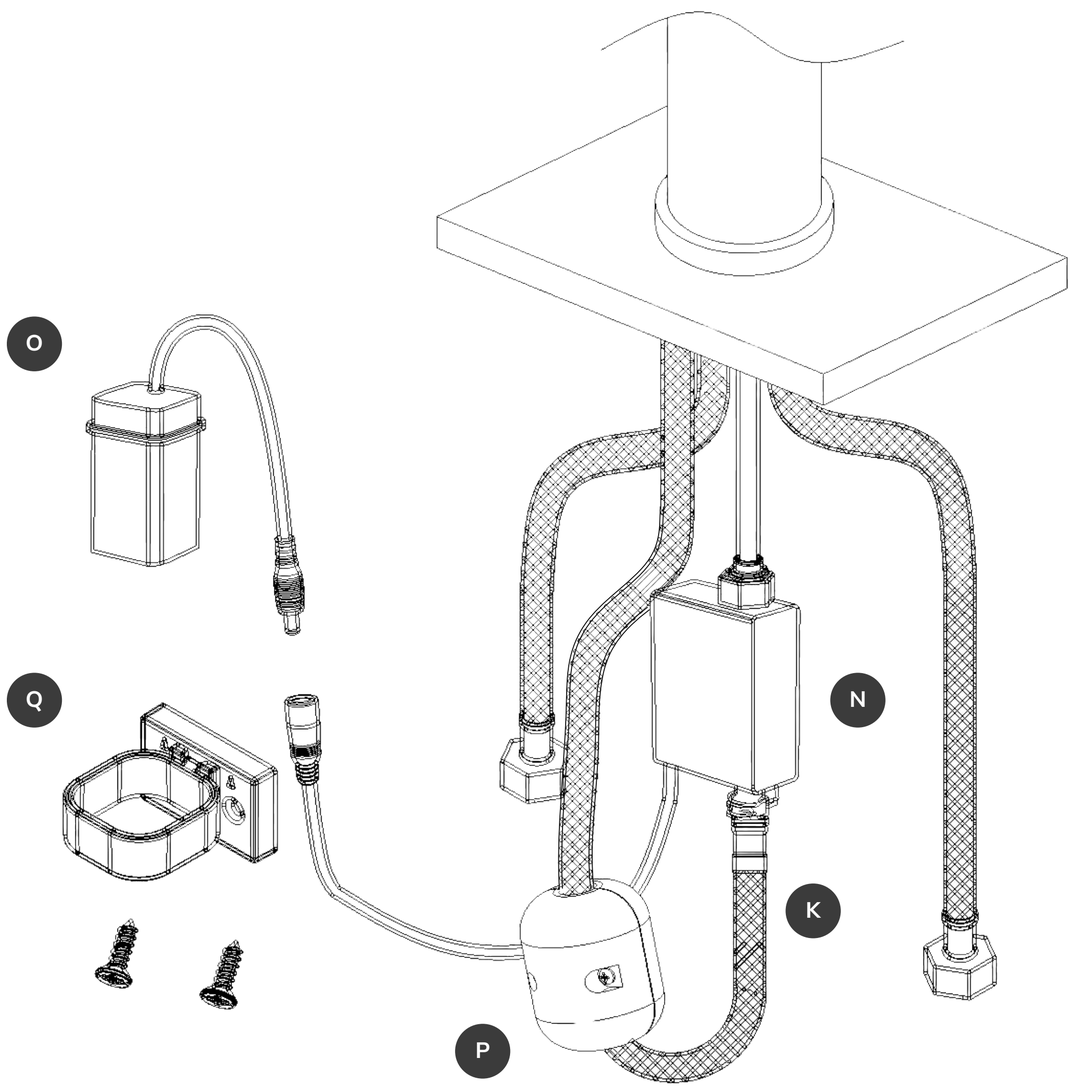


**⚠ CAUTION**

"AA" Batteries 1.5V Alkaline only (Last at least 1 year under normal use)

**⚠ NOTE**

- When installing the battery box, avoid exposing it to water and humidity.
- When installing the battery bracket, make sure the arrow on the surface faces upward and the height does not exceed 6 inches (15cm) from the cabinet floor.
- The battery must be installed with attention to the polarity of the positive and negative terminals, and it must not be installed in reverse.



© 2026 Signature Faucets. All rights reserved.

## 5 Connect Water Line

Connect the hot and cold flexible supply hose J, M to their respective water outlets.

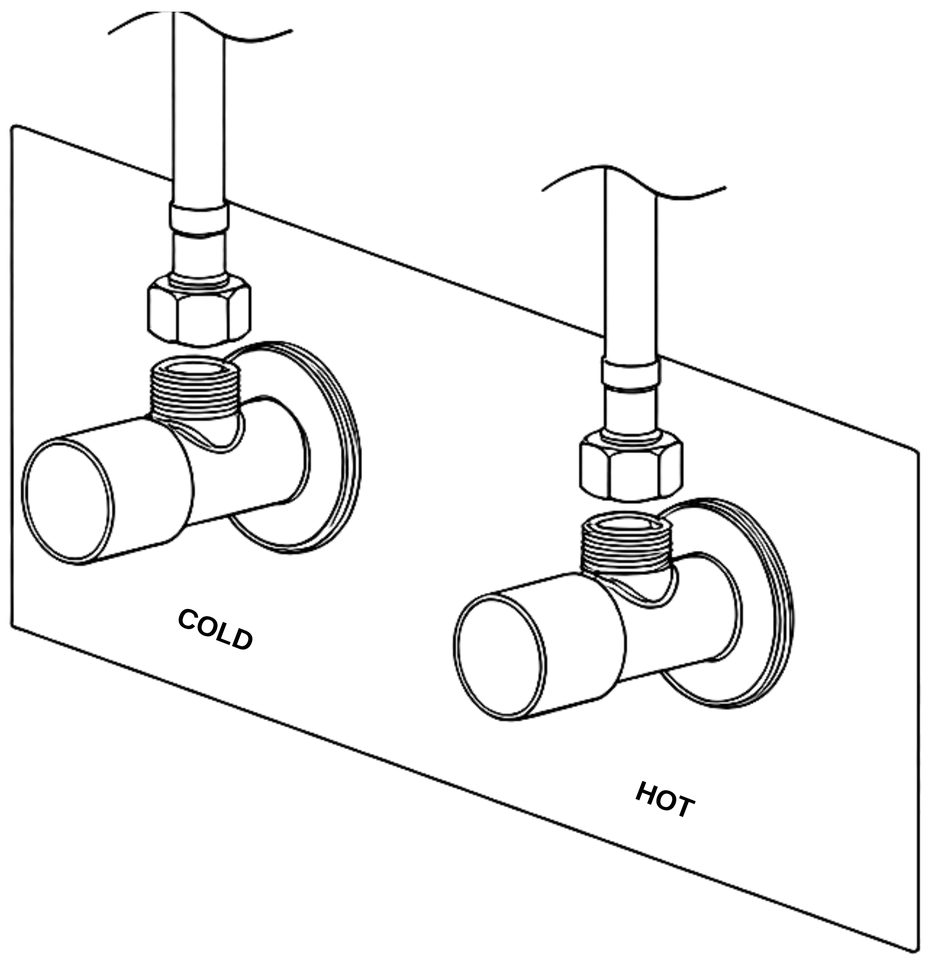


## 6 Flush Out Debris

Grab the spray head hose, unscrew the spray head, and remove it along with the rubber washer. Turn on the faucet and let the water run for a minute to flush out debris. Turn off the faucet and re-install the rubber washer and spray head.

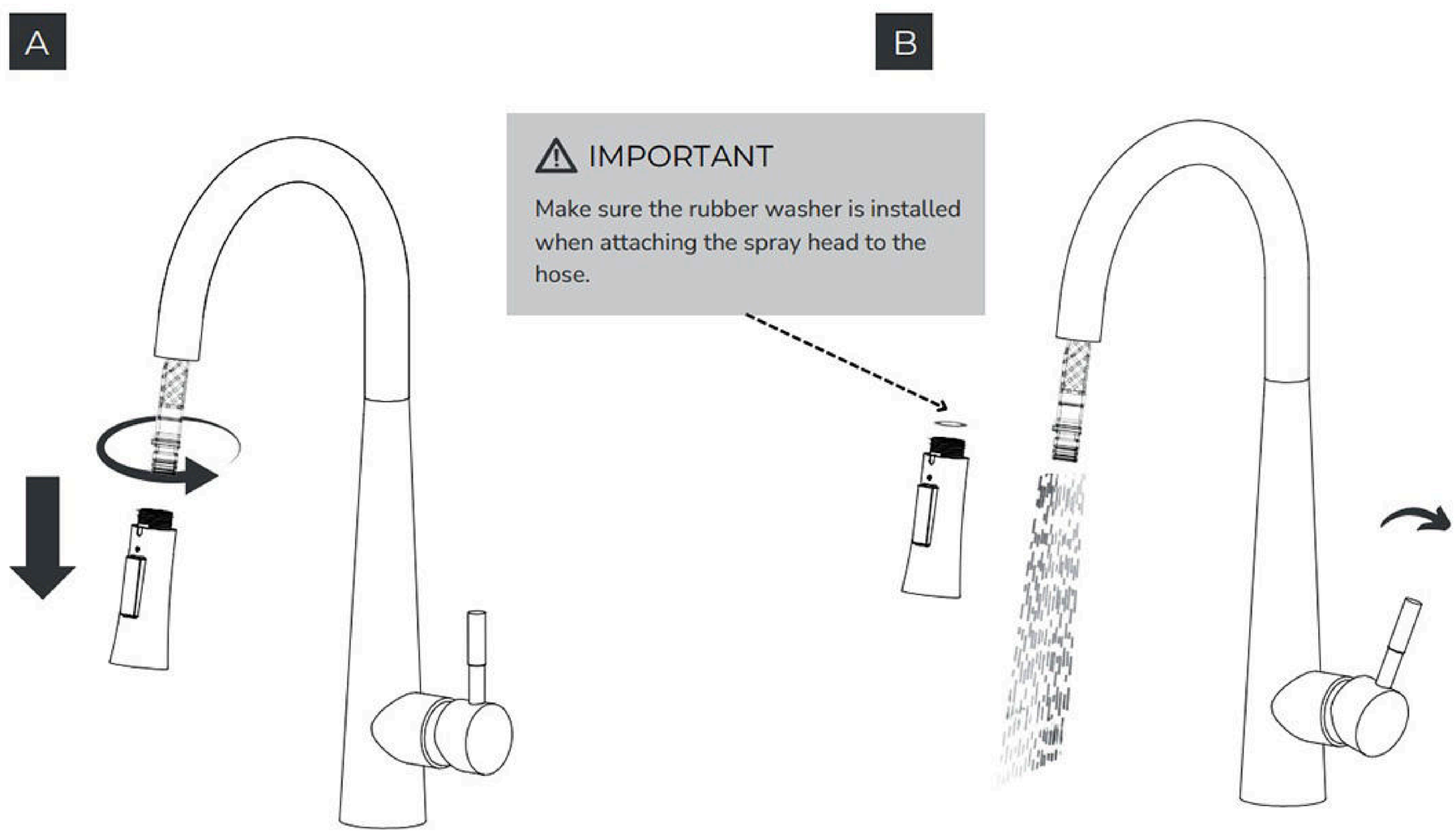




© 2026 Signature Faucets. All rights reserved.

## 7 Check for Leaks

Check connections at arrows for leaks, and retighten if needed. If still leaking, inspect the seals for damage. Pull the spray head from the spout and use the trigger to switch between aerator and spray.

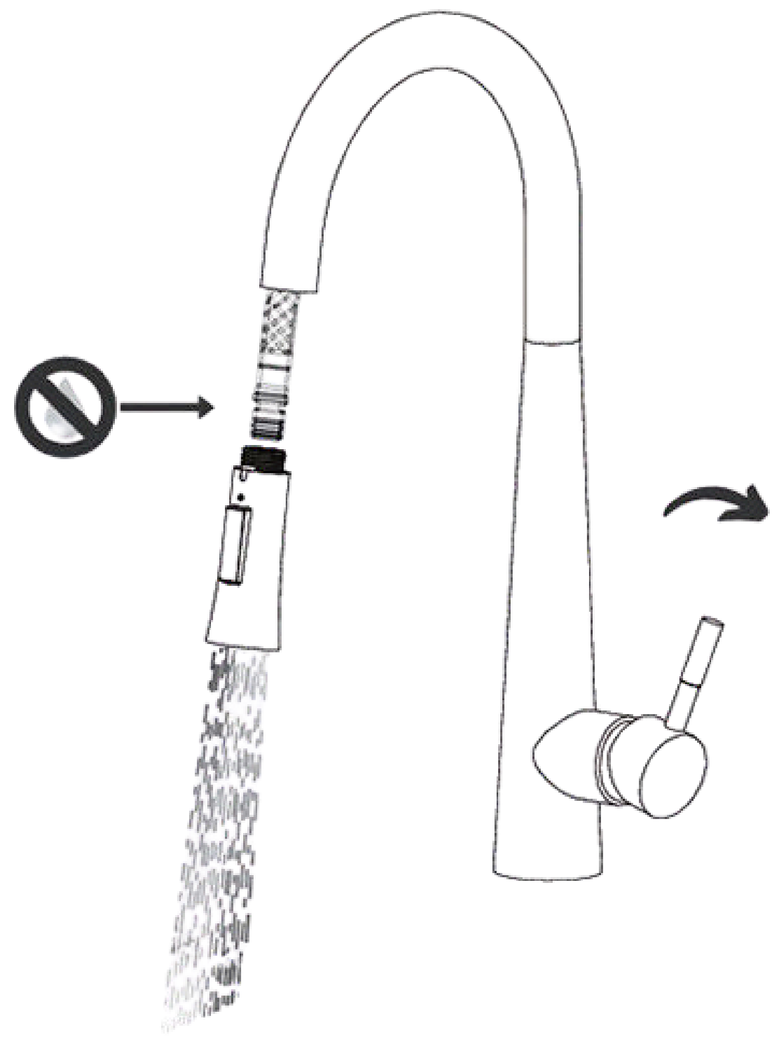

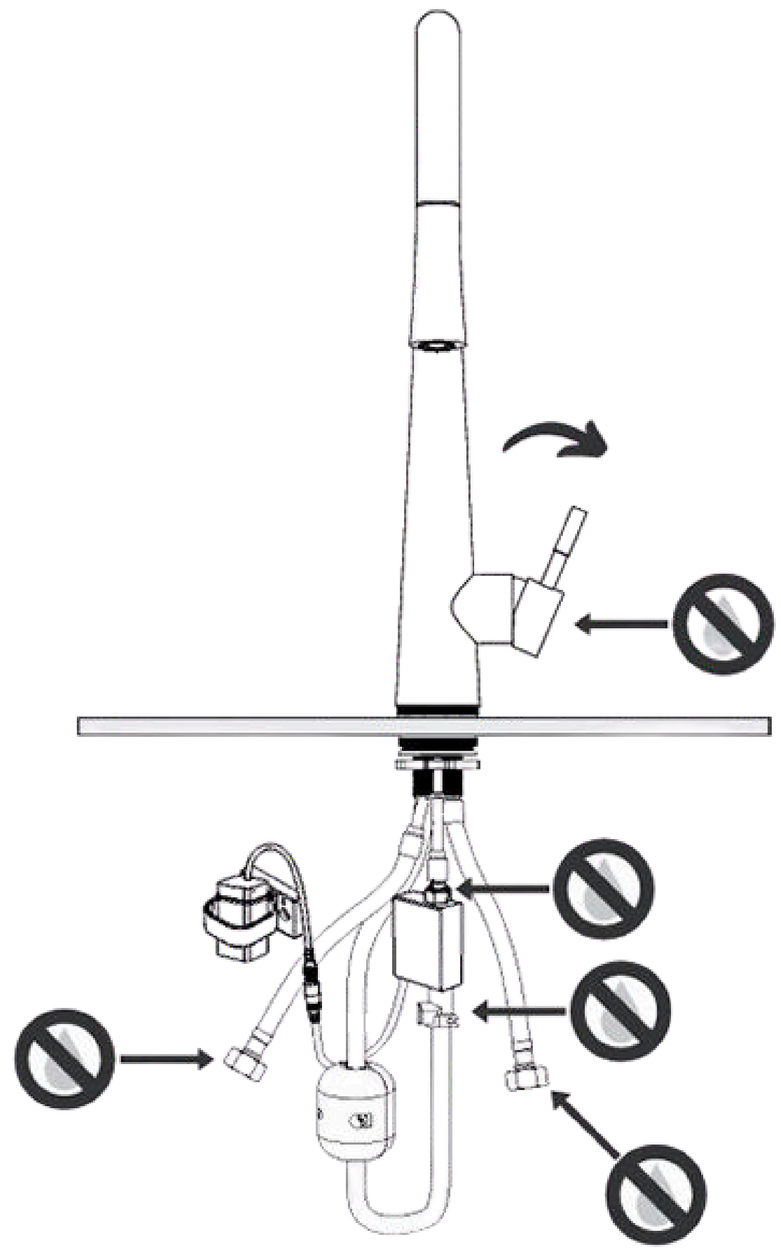

## * [OPTIONAL] Switching to Manual Mode Using Quick-Connect Fitting

This step is not necessarily part of the installation process but serves as an additional guide if you prefer to use the touch faucet in manual mode using the quick-connect fitting R.

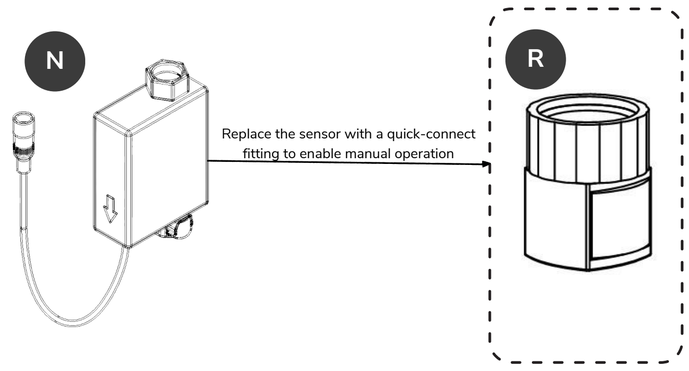


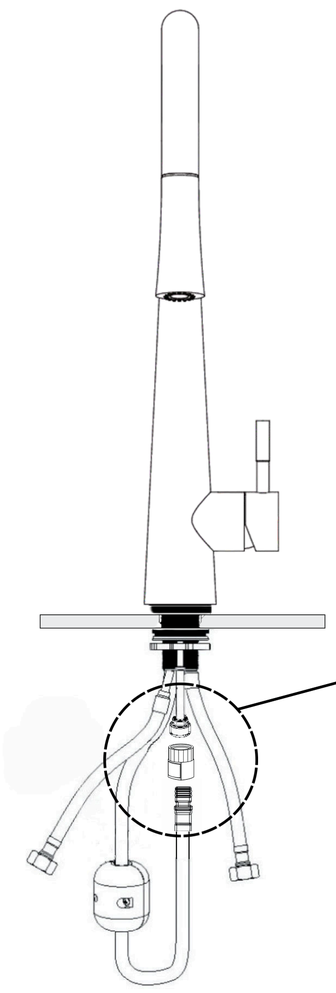

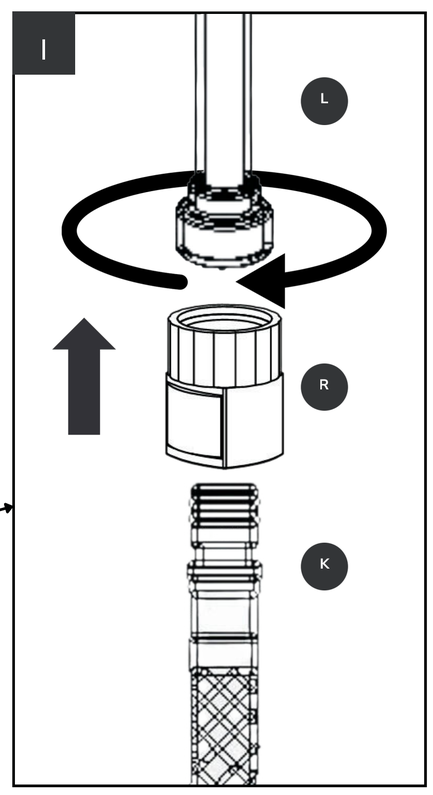


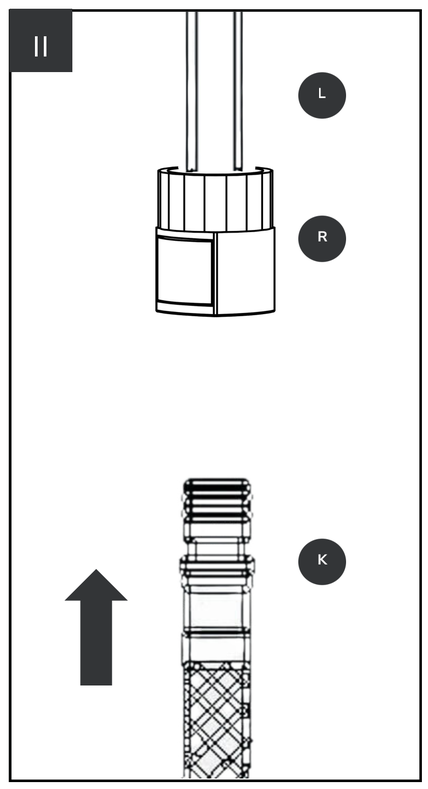


### ⚠ ATTENTION

The quick connect fitting was packed separately. DO NOT DISCARD. Keep it in a safe place for future use.

### ⚠ STEPS

1. Begin by shutting off the water supply.
2. Proceed to disconnect the battery box O from sensor N.
3. Remove the Touch Sensor N and securely attach the quick-connect fitting R to the mixer pipe L.
4. Finally, connect the spray hose K to the fitting, ensuring it snaps into place audibly.



© 2026 Signature Faucets. All rights reserved.

## POWER-ON INSTRUCTIONS

- Connect the battery box to the sensor box to power it on only after all components have been installed.
- Do not touch any part of the faucet for one minute after powering on. During this time, the Touch Sense sensor will perform environmental detection and automatically adjust to the surroundings. Touching the faucet during this process may cause data deviation and reduce touch sensitivity.
- Set the faucet handle to the “open” position. Once calibration is complete, you can use touch control on the faucet body to turn the water on or off.

**NOTE:** The Touch Sense sensor will automatically shut off after discharging water for more than 3 minutes.

## TROUBLESHOOTING

| PROBLEM | SOLUTION |
|---|---|
| Low Water Flow | • Check the aerator/screen washer for debris or mineral buildup—clean and reinstall.<br>• Verify that the supply valves under the sink are fully open.<br>• Inspect supply hoses for kinks or blockages. |
| Water Leaks | • Ensure connections at the supply lines and the faucet base are tight.<br>• Replace worn washers or O-rings.<br>• If leaking at the spout, the cartridge may need replacement. |
| Handle Difficult to Operate | • Mineral deposits may be affecting the cartridge. Remove and clean, or replace if needed.<br>• Apply plumber’s grease to moving parts if stiff. |
| Uneven or Spraying Water Stream | • Aerator may be clogged or damaged — clean or replace. Apply plumber’s grease to moving parts if stiff. |
| Touch Sense Function | **Conductive Interference**<br>• Remove tools, debris, or metal objects bridging the faucet and sink.<br><br>**Signal Interference**<br>• Keep the battery box away from high-power appliances.<br>• Ensure cables are straight, untangled, and securely connected.<br>• Wipe away any moisture around the battery box.<br><br>**Touch Sense Sensor Box Condition**<br>• Inspect for damage to the sensor box or wiring.<br>• Remove dust or dirt buildup.<br><br>**Power Supply**<br>• Use fresh, high-quality alkaline batteries.<br>• Replace weak or partially drained batteries.<br>• Confirm correct polarity (+/–) when installing batteries. |

## CLEANING & CARE

For best care, wipe the faucet dry with a soft, clean cloth after each use to help prevent water spots and mineral buildup. For regular cleaning, use clean water and a soft, damp cloth, then dry the surface thoroughly.

**⚠ IMPORTANT**

Remember to clean the Touch Sense Sensor screen washer every 6 months, or whenever you notice a drop in water flow.

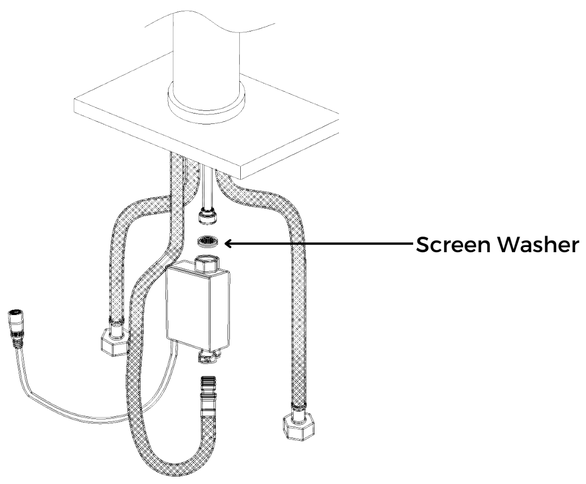


**⚠ NOTE**

It is recommended to use SOFT 99 WAX on chrome finish only. To clean the faucet, apply the cleaning solution to a cloth instead of directly spraying it on the faucet.

For stubborn water spots or buildup, gently wipe the area without scrubbing.

**⚠ CAUTION**

**DO NOT USE** cleaning products containing ammonia, bleach, alcohol, or other harsh chemicals.
**DO NOT USE** any form of abrasives (e.g. abrasive sponges or steel wool).



© 2026 Signature Faucets. All rights reserved.